REV. NO.	DATE	REASON OF REVISION	REVISER	QUANTITY

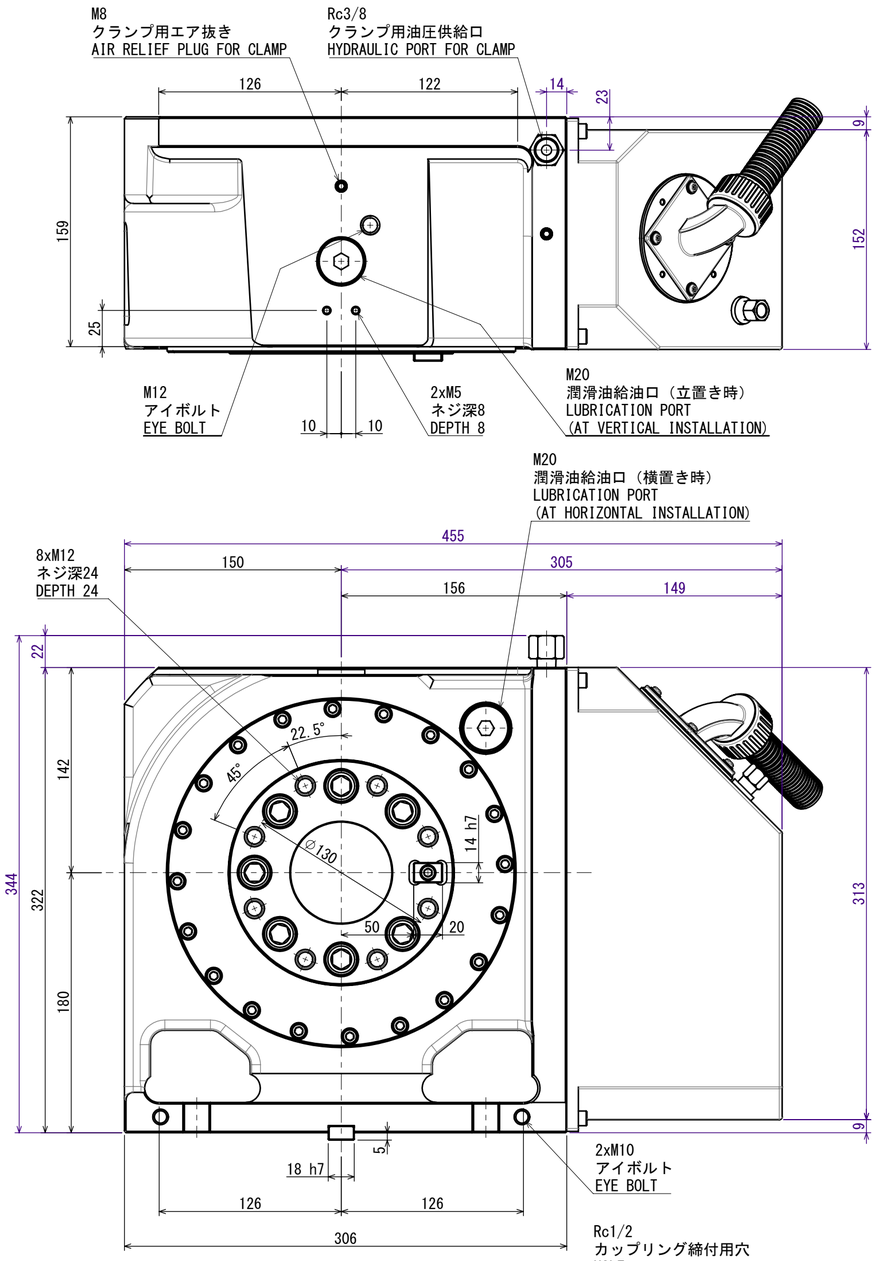

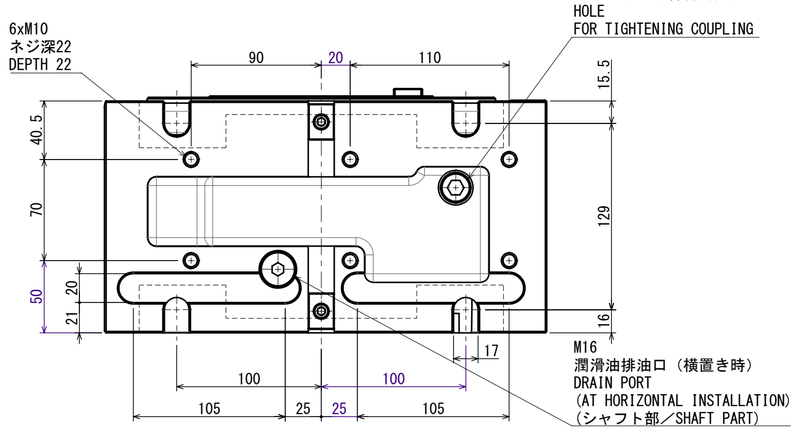

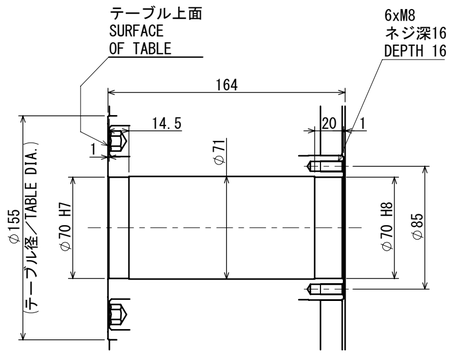

スピンドル穴／SPINDLE THRU-HOLE

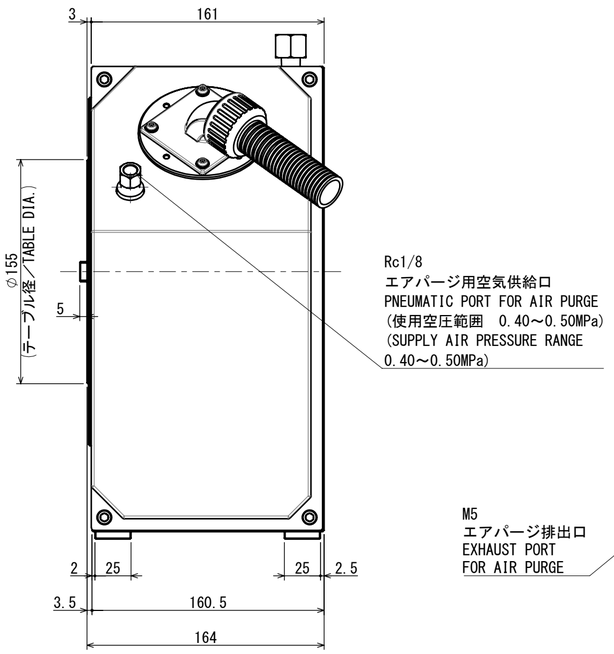

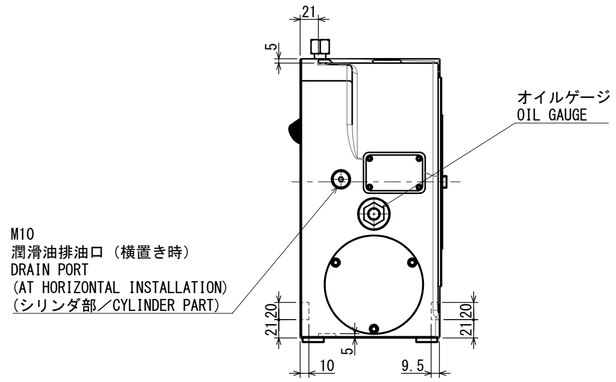

A矢視／VIEW A (1：5)

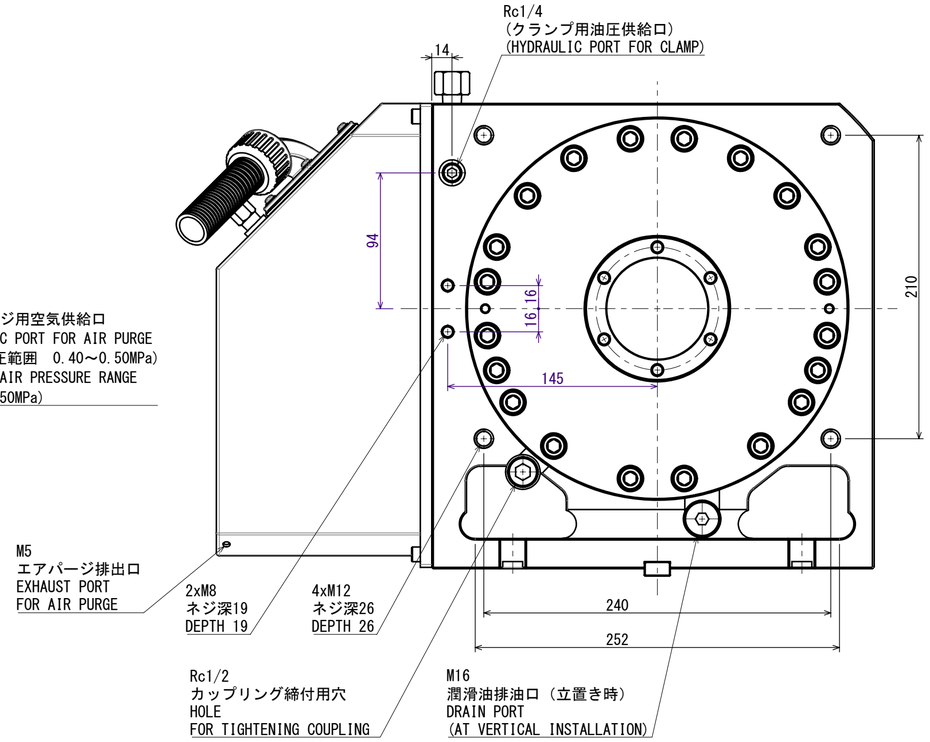

CAREER			SCALE	TYPE	MK250RHV
			1:3	NAME	NC ROTARY TABLE MK250RHV OUTSIDE VIEW
APPROVAL	INSPECTION	DRW 3D	3RD ANGLE		
Kitagawa Corporation		DATE		DRW NO.	1/1 P